- Eyes fall at the halfway point
- Pupils & iris are dark
- No visible white of the eyes (Sclera)

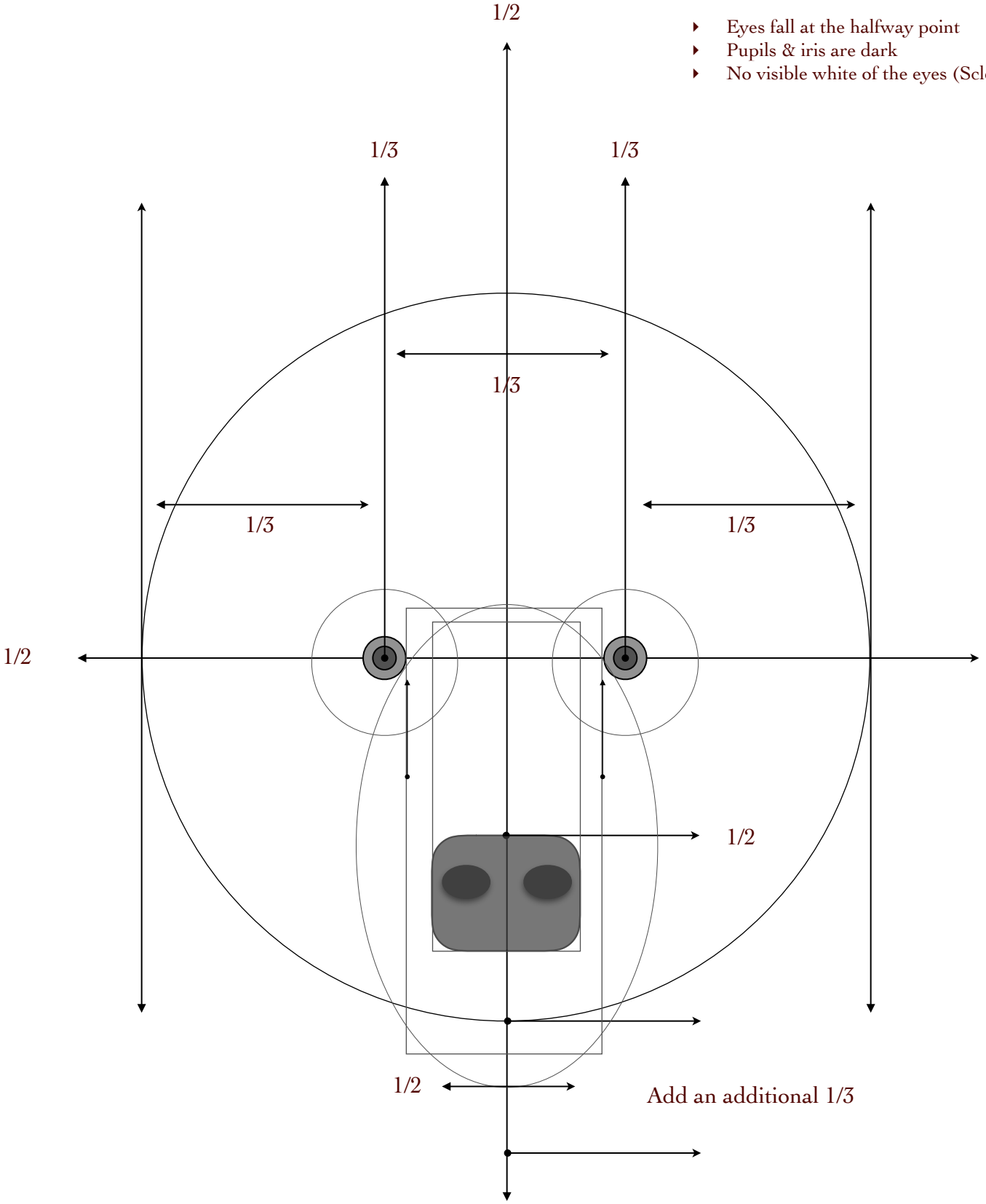

Idealized Proportion: Ursidae

Animalia Anatomicae

© Copyright by Michael M. Hensley